PROMETHEUS ASTRO

HARMONIC DRIVE MOUNT

TYR

Mount User Manual



Quick Start / Setup / Operation / Care

ENGLISH | 8 November 2026

TYR-MOUNT-EN 3.1 | Firmware 1.2.11 and 1.2.20

Contents

Click a chapter below or use the PDF bookmarks. Start with the Quick Start, then read the full setup and safety instructions.

1 Welcome and essential safety 3

2 Quick Start 4

3 Your Tyr mount 5

4 Assembly and load installation 7

5 Power and connections 9

6 First connection and initial setup 11

7 Polar alignment and position reference 12

8 Tracking movement and imaging 14

9 Controllers and software connections 15

10 Shutdown care and transport 17

11 Troubleshooting 18

12 Warranty service and product records 20

13 Quick reference 22

1 Welcome and essential safety

The Prometheus Astro Tyr is a powered, two-axis harmonic drive telescope mount for astronomical observing and imaging. This guide explains how to assemble, connect, reference and operate the mount, then care for it between sessions. Read it before attaching a telescope or applying power.

This edition describes Tyr firmware **1.2.11** and **1.2.20**, including the Home reference and manual-motion safeguards. See Troubleshooting for the status LED patterns in **1.2.20**. The companion **Tyr Control Center User Manual** explains software installation and individual controls. Use both guides when setting up a new system. Software and accessories supplied with your order may differ from the illustrations.

Keep these instructions

Keep this manual, your invoice and the mount serial number with your equipment. Give the instructions to anyone who will operate the mount. Download current instructions and compatible software from Prometheus Astro Downloads.

WARNING indicates a risk of injury or equipment damage. **CAUTION** identifies an action that can lose a reference, interrupt operation or damage configuration. A **Check** tells you what must be true before continuing. Read an entire procedure before starting it.

Protect people and equipment

WARNING - Solar observing. Never point an unfiltered telescope, finder or camera at the Sun. Permanent eye injury, fire and equipment damage can result. The Solar tracking setting changes a motor rate; it provides no optical protection. Solar observing requires suitable, securely fitted equipment and specialist procedures.

WARNING - Moving equipment. Keep hands, hair, clothing and bystanders away from the saddle, axes, wedge and counterweights. A telescope can move unexpectedly after a GoTo, Home, Park, controller shortcut or enabled automatic startup routine. Clear the complete path before turning on the mount.

WARNING - Stability. The tripod or pier must support the complete system and resist overturning throughout its travel. A harmonic drive can move an imbalanced load without making the installation stable. Do not rely on the mount's drive resistance to support an unsecured telescope.

Support the telescope before loosening its clamps. Secure counterweights with suitable retention hardware. Never force an axis by hand or use the telescope as a lever. Do not open the casing, alter internal wiring, lubricate internal parts or change drive components without support instructions.

Keep electrical connections dry. Protect the controller from rain, standing water and condensation. The mount is not described here as waterproof. Do not leave it in an unprotected outdoor installation. Use a suitable regulated power supply, correct polarity and adequately rated cables.

What Stop and the limits can do

Software Stop requires a working connection and powered controller. Manual direction commands have a ten-second continuous-motion budget in current firmware; repeated commands do not extend it. The cutoff starts deceleration, so physical movement does not end instantaneously. Release the direction control or issue Stop before starting another movement.

GoTo, Home, Park and pulse guiding use their own operating rules. The ten-second manual limit is not a ten-second limit on every automatic move. Coordinate limits depend on a trustworthy Home reference, correct settings and site information. They do not detect an obstruction, an insecure clamp, an overturning tripod or every lost motor step.

If movement is hazardous: use Stop immediately. In Windows Control Center, use **STOP** or **Esc** while its window has focus. If communications fail and motion remains hazardous, remove main power while keeping any unstable load supported. After interruption or suspected slip, recover the physical reference before the next automatic move.

2 Quick Start

Prepare before the first evening

Prepare the correct tripod/pier adapter, specified supply, telescope and control device. For imaging, configure your camera, guider and solving software first. Download software in advance; normal local control does not require Internet.

Step	Action and success check
1 Secure the support	Fully assemble and brace the tripod or pier. Fit the correct adapter and mount fixing. The head must not rock or turn.
2 Fit the load	Fit approved counterweight hardware when required, then the telescope and accessories. Confirm full dovetail engagement and secure retention.
3 Route cables	Allow for both axes, both pier sides and the full intended imaging sequence. No cable should become taut, rub a sharp edge or enter a joint.
4 Connect and power	Use regulated 12 V DC / 10 A, centre positive. Select the USB socket being used, or prepare the Wi-Fi connection. Keep startup movement clear.
5 Set the observing site	Enter latitude, the correct longitude convention and the standard-time offset. Set date/time and verify the mount's UTC.
6 Establish Home	With clear space, unpark if appropriate and complete the initial switch Home. Confirm actual orientation and Home state.
7 Polar align	In equatorial use, physically align the RA axis with the celestial pole. Recheck the result after securing the adjustments.
8 Verify pointing	Solve and Sync a known field, or centre a known star and Sync correctly. Test a nearby safe target before enabling a sequence.
9 Track and guide	Use Sidereal for stars, enable tracking and check the image. Add guiding and automatic flips only after their settings and clearances have been verified.

Ready to continue: verify time, site, physical position, secure attachment and clear travel. Connection alone does not establish these conditions.

A short first movement test

1. Keep people and loose cables clear. Choose a low manual slew rate.
2. Make a brief direction-button movement and release it. Confirm that movement stops.
3. Test Stop during another brief movement. Check both axes without approaching the support or other obstacles.
4. Inspect connections and clamps again. If the direction or position is unexpected, stop and check site, geometry and Home before continuing.

Begin with short, low-speed, attended moves. Increase the range only after movement and recovery checks pass.

At the end of a session

Finish image acquisition and stop guiding. Park at a previously checked stow position and wait for **Parked**. Turn tracking off, disconnect control applications, then switch off the mount. Support the telescope before removing it. Dry damp equipment before closing the case.

3 Your Tyr mount

Product overview

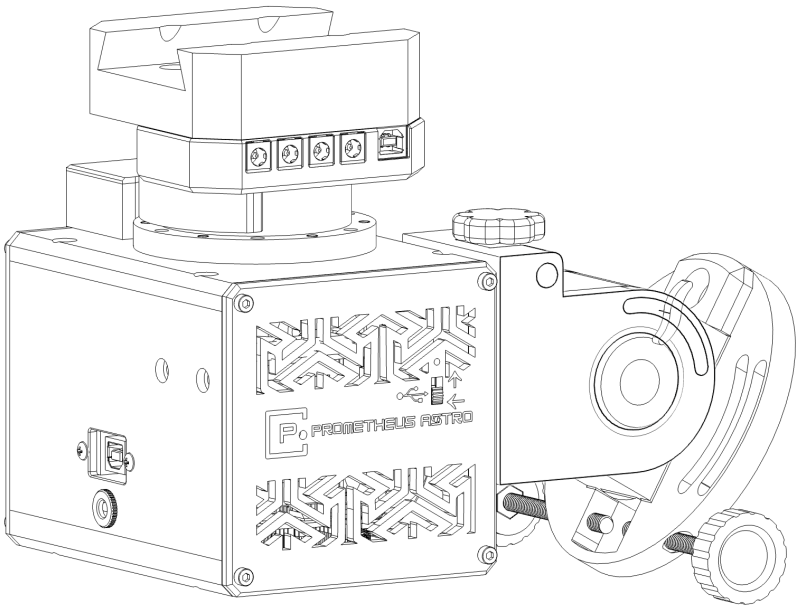

Figure 1. Tyr head and polar wedge. The saddle is above the Dec axis; the RA assembly and wedge support it.

Component	Purpose
Telescope saddle	Clamps the telescope's compatible dovetail. Always support the telescope while adjusting the clamps.
Declination axis	Moves the telescope relative to the celestial equator in equatorial mode. It is the axis nearest the saddle.
Right ascension axis	Rotates around the polar axis and supplies the principal motion for stellar tracking.
Polar wedge	Adjusts the physical altitude and azimuth of the RA axis for polar alignment.
Mounting base and adapter	Attach the mount head to the correct tripod or pier interface.
Front and saddle connections	Provide controller power, the selected USB data path and accessory power distribution.
Home reference sensors	Establish the mechanical reference during the initial switch Home and recovery. They are not general collision detectors.

A **GoTo** moves to requested coordinates. **Sync** identifies where the telescope is already pointing. **Home** is the mount's mechanical reference. **Park** is a saved stow position. These functions are different; one is not a substitute for another.

Specifications

Item	Specification
Drive system	Harmonic reduction on both axes
RA reduction	750:1
Dec reduction	400:1
Mount head mass	Approximately 4.98 kg / 11.0 lb
Supported payload without counterweights	Up to 20 kg / 44.1 lb, with suitable geometry and stable support
Supported maximum with counterweights	Up to 45 kg / 99.2 lb, using an approved counterweight arrangement
Required power supply	Regulated 12 V DC, 10 A, centre positive
Accessory outputs	Four 12 V DC sockets, 7 A maximum combined across all four
Counterweight attachment	M12 counterweight bar; use approved hardware and retention
Tripod or pier attachment	Tyr EQ6 adapter with M12 centre fixing; Tyr EQ5 arrangement with M10 fixing
Telescope attachment	Vixen-compatible saddle; use the supplied or approved saddle/adapter for your dovetail
Control connections	Selected USB-B data connection, Wi-Fi and supported mount-side BLE controller
Operating modes	Equatorial; supported Alt-Azimuth configuration requires the correct physical and software setup

Values apply to the appropriate Tyr configuration. The order specification and supplied labels identify your delivered hardware. A higher theoretical load is not an operating rating. No fixed guiding RMS or unguided exposure duration is guaranteed by these load and drive specifications.

What is supplied

The standard package includes the mount head, a 50 cm power cable, a cigarette-lighter-style 12 V lead, a 50 cm USB-B cable, an EQ6 mounting puck, an EQ5 adapter/puck, an EQ6 pier centre bolt and an EQ5 pier bolt spacer. Check the packing list for your order; included adapters and cable lengths can vary.

A telescope, tripod/pier, regulated power supply, camera, guider, counterweight bar/weights and R1 controller are separate unless included in your order. Inspect all supplied parts for transport damage before loading the mount. Retain the original protective packaging and report shortages or damage to your supplier.

Plan the complete installation

Include the optical tube, rings, dovetail, camera, filter wheel, focuser, rotator, guide equipment, carried computer and cables in the moving payload. The tripod or pier must support these items plus the mount, weights and mounting hardware. Long tubes, large wind area, an off-centre camera or a cable pull can create a demanding load even below the mass rating.

Before designing a permanent pier, enclosure or roof clearance, obtain the applicable Tyr mounting drawing and adapter details from support. Do not infer hole spacing, fixing torque or load clearance from a photograph. Allow room for the full telescope, camera train, cables and a meridian flip.

4 Assembly and load installation

Choose and prepare the support

Use firm ground and a support suited to the complete load. Spread tripod legs fully, fit the brace/tray as required, and secure extension or levelling hardware. Avoid loose paving, unstable decking and soft ground that can settle. A reasonably level base simplifies repeatable setup but does not replace polar alignment.

Set the assembly so a shifted telescope or counterweight cannot overturn the support. Protect the area from accidental contact by people or animals. A pier extension can improve clearance only when it is a suitable, securely fitted part of the load-bearing system.

Fit the EQ6 mounting arrangement

1. Keep the telescope off the mount. Identify the Tyr EQ6 puck and the correct centre fixing.
2. Attach the supplied puck to the Tyr base with the two intended M4 attachment screws. Check seating and thread engagement.
3. Place the head on the support with the attachment surfaces correctly aligned.
4. Engage the **M12** EQ6 centre bolt without forcing it. Secure the adapter and fixing so the mount cannot rock or rotate.
5. Check the assembled joint before adding the telescope. Recheck attachment security after the first loaded session.



Figure 2. Mounting parts for the Tyr adapter arrangement. Match the puck, bolt and spacer to the support.

Use the supplied hardware and the support manufacturer's tightening instructions. A bolt that reaches the bottom of a thread before clamping the joint is not secure. Do not substitute a fixing simply because it appears to engage.

EQ5 and pier arrangements

Use the correct Tyr EQ5 adapter and **M10** fixing arrangement. Fit the supplied EQ5 pier spacer where required. The EQ6 arrangement uses its M12 fixing. Do not mix the two bolt and spacer stacks or force a partly engaged thread. If the supplied parts differ from the illustrations, obtain support instructions before loading.



Figure 3. Bolt and spacer arrangement from the supplied Tyr hardware instructions.

Install counterweights and the telescope

1. Secure the mount on the support. Keep power off and the load supported during fitting.
2. If the installation requires counterweights, fit the approved bar and weights before releasing support of the telescope. Keep the retaining stop in place and tighten each weight's clamp.
3. Open the saddle only enough to accept the correct plate. Insert the dovetail fully and check that the clamping faces actually engage the plate.
4. Support the optical tube while tightening the saddle clamps. Recheck rings, camera connections and accessory attachments.
5. Arrange the load to reduce unnecessary imbalance and cable torque. Do not force an axis by hand to perform a conventional free-swing balance test.
6. Review the complete moving mass, wind exposure and clearance. Use low-rate powered movements for the first path check.

For disassembly, support and remove the telescope before removing the counterweights or freeing the mount from its support. Never loosen the saddle, bar or centre fixing under an unsupported load.

Cable routing

Provide separate movement allowance at the RA axis, Dec axis and camera train. Secure the stationary ends so a snag does not load a plug or telescope clamp. Leave enough slack for a meridian flip without allowing loops to enter a joint or catch on a tripod leg.

Trace the route at the lowest, highest and both-pier-side positions used by your sequence. A cable that is clear at Home may tighten after a flip. The software display does not include your actual cable loops or accessory envelope.

5 Power and connections

Main power

Connect a regulated **12 V DC / 10 A** supply with **positive centre and negative outer contact**. Verify the supply, connector and cable before connection. USB is a communications link and is not a substitute for the mount's main supply.

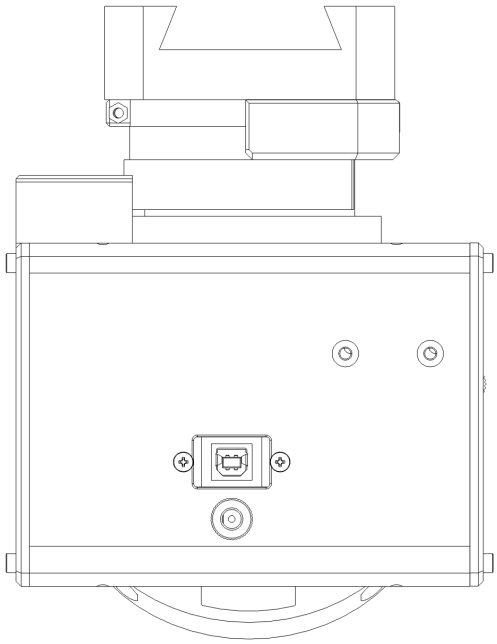

Figure 4. Front panel with main DC input and the front USB-B data connection.

The power button has a red standby ring. With the supply present and the button out, the ring indicates standby. Pressing the button in enables the controller and extinguishes the ring. An unlit ring alone is not proof that the mount is disconnected from power.

Do not use a 24 V vehicle socket. The supplied vehicle-style lead is not a voltage converter. For battery operation, use a suitable regulated output and cables sized for the complete load. For mains operation outdoors, follow the supply and local electrical-safety requirements.

Accessory power budget

The four 12 V outputs share a **7 A combined maximum**. This is not 7 A per socket. Add the peak demand of cameras, heaters and every other connected accessory, including start-up and cooling demand. The main input must also supply the mount itself.

Example accessory	Peak draw
Cooled camera	2 A
Dew heater	2 A
Accessory 1	1 A
Accessory 2	1 A
Combined accessory demand	6 A; leave margin for actual peaks and suitable cables

Use a separate suitably rated power distribution system when accessory demand would exceed the shared limit. Do not join output sockets in parallel, bypass protection or increase voltage to compensate for a poor lead. A larger input supply does not increase the output rating.

USB sockets and selector

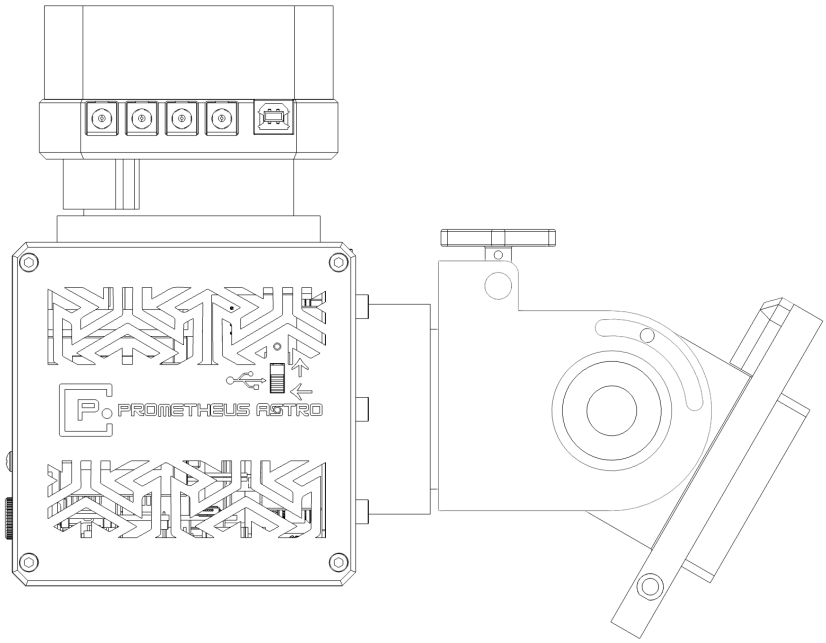

Figure 5. Saddle-side accessory power sockets and the alternative USB connection. The case selector chooses the active USB path.

The front and saddle/dovetail USB-B connections share the data path. **Only one is active at a time. UP selects the saddle connection; DOWN selects the front connection.** Set the selector for the socket actually being used. Start with one known-good data cable and avoid unnecessary hubs during initial setup.

The standard USB control speed is **9600 baud**. The compatible software may temporarily use a different speed for firmware transfer; do not change the normal control setting merely to request a faster update.

Connection order

1. Secure the complete assembly and check that startup movement is clear.
2. With the mount switched off, choose the USB path and connect the data and power leads.
3. Connect accessories only after checking their polarity, voltage and combined current.
4. Power the controller. If Auto Home on boot is enabled, expect immediate movement.
5. Connect the control software and verify identity, time, site and reference before a target slew.

If the controller restarts during movement or when a heater/camera starts, stop and inspect supply voltage, cable losses, plugs and load demand. Do not change motor current or drive settings to treat an inadequate power path.

6 First connection and initial setup

Select your control method

Method	Typical use
Tyr Control Center and Shared Hub ASCOM driver	Windows operation and shared control from imaging applications
Built-in web interface	Local browser access from a compatible computer, phone or tablet
Dedicated Tyr INDI driver	Linux with KStars/Ekos or another supported INDI client
Magicsee R1	Local handheld control after pairing the supported controller to the mount

All interfaces act on the same mount and its saved configuration. Avoid conflicting commands from different devices. Finish motion before changing the control arrangement. Install the correct Tyr package rather than assuming another manufacturer's mount profile is interchangeable.

USB and Windows

Install the current Tyr package and required ASCOM Platform before connecting imaging clients. Select the CP210x COM port and **9600 baud** in Control Center. If Windows does not list the adapter, obtain its driver from the official Silicon Labs VCP page. The companion software manual explains installation and Shared Hub setup.

Wi-Fi and the browser

Join the mount's access point, normally named **TYR_XXXXXX**, using its supplied credentials. The initial Wi-Fi password is **password** unless changed. Stay on the mount's network if the device reports no Internet. Open **http://192.168.0.1/** directly in the browser; use the actual saved address if it differs.

The mount's command port is normally **9999**, separate from its HTTP web page. A TCP-capable Tyr client uses the address and command port, not the browser URL. In station mode, the mount and client must be on mutually reachable networks.

Change default Wi-Fi and administration credentials after confirming access, and retain a recovery method. USB can be used to repair network settings if the mount cannot join a router. For web administration, the initial administrator password is **password** unless changed; firmware-update login uses **admin** and the current administrator password.

Site and clock

Enter the actual observing latitude. Tyr's native longitude convention is **west positive**: east longitudes are negative. Drivers may display a different convention and convert it automatically. Do not copy a displayed driver value into a different interface without checking its convention.

Tyr stores **UTC minus local standard time**, excluding daylight saving. Its sign is opposite the familiar UTC time-zone label. Athens UTC+2 standard time uses **-02:00** throughout the year. India UTC+5:30 uses **-05:30**. A UTC-5 standard zone uses **+05:00**. Set date/time using the software procedure, then verify the mount's UTC, including the date near midnight.

The first Home

Clear the entire path and complete the initial switch Home after startup. Confirm the actual physical orientation and the reported Home state. A stored coordinate or a successful computer connection is not proof of a recovered physical reference. If the first Home fails, stop and resolve the cause before attempting a long GoTo.

7 Polar alignment and position reference

Four different operations

Operation	What it changes
Polar alignment	The physical direction of the RA axis, using the wedge
Home	Establishes or returns to a mechanical reference
Sync	Updates the controller's sky-coordinate reference at the current pointing direction
Park	Moves to a saved stow position and records the parked state

Sync does not physically polar align the mount. A pointing model or compensated tracking can improve behavior under suitable conditions, but does not remove field rotation caused by polar misalignment.

Initial polar alignment

In equatorial mode, the RA axis must point toward the celestial pole of your hemisphere. Set the wedge altitude approximately to the absolute latitude of the observing site. Point it toward true north in the northern hemisphere or true south in the southern hemisphere. A magnetic compass may require a local magnetic-declination correction and can be disturbed by nearby metal.

Use a suitable camera-based polar-alignment procedure, such as the configured tool in your imaging software, to refine the result. In the north, Polaris is near the pole but is not the exact pole. In the south, do not attempt to use Polaris; use the software's southern-hemisphere procedure and suitable visible fields.

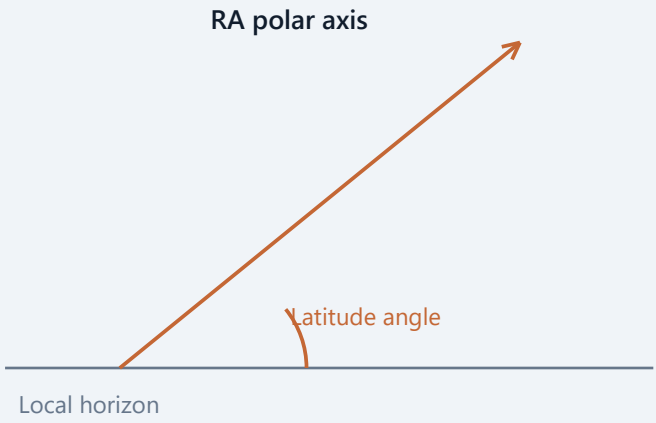

Point at the celestial pole

Northern hemisphere: north pole

Southern hemisphere: south pole

Altitude adjusts the elevation.

Azimuth adjusts left / right.

A Sync cannot move this axis.

Adjust the wedge

1. Assemble and load the rig securely, with no movement active. Follow the physical wedge's locking arrangement.
2. Make small altitude and azimuth adjustments while watching the alignment tool's indicated correction.
3. Adjust opposing screws progressively. Relieve opposing pressure rather than forcing one screw against another.
4. Secure the intended locks without disturbing the setting. Do not loosen a structural pivot or support fixing under load.
5. Re-measure the final alignment after securing the adjustments and after any significant change to the load or support.

The instructions from a different mount's wedge do not define which Tyr fasteners may be loosened. If the locking arrangement is unclear, obtain support instructions before adjustment. Never dismantle the wedge or drive casing to correct a polar-alignment result.

Home after startup and later in the session

The first successful Home after startup establishes the physical reference using the switches. With that reference still valid, subsequent ordinary **Home** commands return using the saved session position and preserve the sky-reference relationship established by Sync. A recovery Home, restart, reference loss or changed Home offsets can require the switch routine again.

Do not assume that a Home reference survives power loss, a stall, an unpowered disturbance or a failed move. If the telescope no longer matches the reported position, stop, clear the rig and recover the physical reference. Counts alone cannot detect every slip.

Verify pointing with Sync

After good polar alignment and Home, slew to a safe visible field. Plate solve and Sync its measured coordinates, or centre a correctly identified star and Sync its true coordinates. Check time, site, hemisphere and actual pier side first. Do not Sync an assumed target simply because it was requested: a stalled or rejected slew may not have reached it.

Tyr cross-checks Sync geometry against its Home-sensor information. If a Sync is rejected, investigate the reference and coordinates; do not disable limits or change gearing to force acceptance. Verify with another nearby safe target before relying on pointing.

Permanent Home offsets

Home offsets relate the switch reference to the intended mechanical zero. If calibration is needed, follow the **Home calibration** chapter in the Control Center manual. Its current two-field workflow assumes accurate polar alignment and a stable telescope configuration. After saving offsets, run a fresh switch Home and verify independent fields. Do not repeatedly adjust offsets merely to improve one target's GoTo result.

8 Tracking movement and imaging

Tracking and manual directions

Use **Sidereal** for stars, **Lunar** for the Moon and **Solar** for a properly equipped solar setup. **King** is a distinct tracking-rate option; it is not a substitute for accurate polar alignment or a suitable guiding setup. Confirm the selected rate and enabled tracking in the controller state.

Direction buttons and the R1 joystick command astronomical north, south, east and west. These are not guaranteed to match up/down/left/right in a rotated camera image. Begin at a low rate and judge movement against the actual field. Release to stop; after ten continuous seconds, release or Stop before starting a new manual movement.

GoTo and meridian flips

Verify a target's coordinates and epoch handling in the application supplying them. Clear the path before GoTo, Home or Park. Confirm the completed state before exposure. A rejected target or stopped slew is not a successful arrival.

An equatorial meridian flip changes the telescope's pier-side arrangement. Test the entire telescope, camera and cable path on both sides before enabling automatic flips. Set conservative limits and coordinate the mount's flip behavior with the imaging application's procedure. A pier extension does not make every target or camera train safe.

Limits

Configure horizon, overhead and meridian limits for the real installation, as well as the applicable axis travel limits. Keep a generous clearance margin and test at low speed. Limits are coordinate protections, not a three-dimensional collision model. They cannot determine whether the actual tube clears a leg or whether a cable is caught.

If already outside an allowed range, a permitted movement back toward safety may be available. Do not increase limits simply to dismiss an error. First establish the actual physical position and a valid reference.

Guiding and realistic performance

A harmonic drive's tracking error varies with load, pointing direction and operating conditions. Long-exposure imaging will usually require a properly configured guide system. Guided RMS depends on seeing, image scale, wind, rigidity, polar alignment, calibration and guide settings; a quoted result is not a guarantee for every installation.

Use your guide software's calibration and analysis tools. Start with a suitable guide-star exposure and adjust from measured behavior rather than assuming the shortest possible exposure is best. Do not use higher motor current as a remedy for wind, poor polar alignment or an overloaded rig.

For drift-based checks, follow the guide tool's assumptions. Active compensation can alter the drift that a tool is trying to interpret. After physically moving the wedge, recheck polar alignment and any affected pointing/guiding calibration.

Alt-Azimuth operation

Alt-Azimuth operation requires both a supported physical arrangement and the matching saved mount geometry. Do not change software geometry alone and assume the head is correctly installed. Remove or support the telescope as required before reconfiguration and obtain the applicable Tyr setup instructions.

Alt-Azimuth tracking keeps a target in view but produces field rotation. Equatorial polar alignment and meridian-flip procedures do not transfer directly to Alt-Azimuth use. Use the correct application configuration, limits and expectations for the chosen mode.

9 Controllers and software connections

Magicsee R1 handheld controller

The supported R1 pairs to the **mount**, not to the PC. Select its compatible **Mode B** using **M / @ + B**, then use Control Center's **Bluetooth** page to scan, select, save and enable it. Release every control after connection and wait for **Controls armed**. Test a brief low-rate movement and its release before using shortcuts.

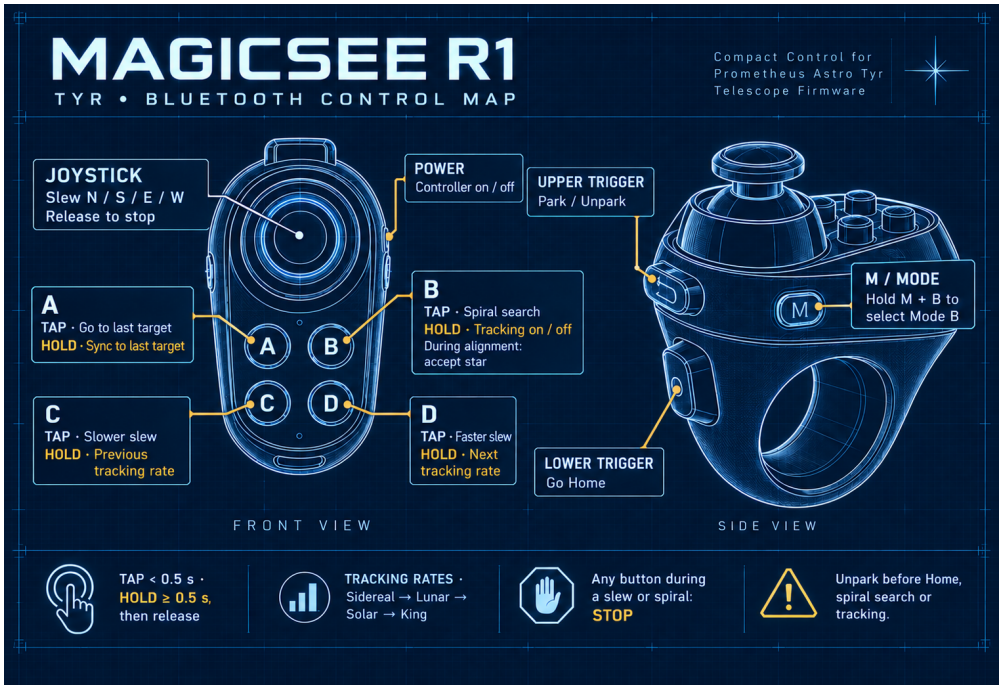

Figure 6. Magicsee R1 control map. Match the physical buttons and supported mode before use.

Control	Tyr action
Joystick	Manual north/south/east/west movement; release to stop
A tap / hold	Go to the last target / Sync to that target; Sync only when the telescope truly points there
B tap / hold	Spiral search / toggle tracking; during alignment, a B hold accepts the current star
C tap / D tap	Decrease / increase manual rate
C hold / D hold	Previous / next tracking-rate preset
Lower trigger	Home
Upper trigger	Park or Unpark according to state

A tap is released before about half a second; a hold is released after at least half a second. During an active slew, a button first requests Stop and its normal shortcut is consumed. Wait for the mount to stop, release and press again. Manual joystick motion is subject to the firmware's ten-second manual budget.

Disable the controller during firmware updates, motor configuration and any operation where an accidental shortcut would be disruptive. A controller may reconnect automatically if enabled and saved; a saved address does not prove it is currently connected or armed.

Windows imaging software

Use the **Prometheus Astro Tyr (Shared Hub)** ASCOM driver for NINA, PHD2 and other compatible Windows clients. The Tyr Hub owns the USB or TCP connection and shares it among these local clients. Do not configure each program to open the same COM port independently.

Linux and Ekos

Use the dedicated **Prometheus Astro Tyr** INDI telescope driver for supported Linux workflows. It supports USB serial and TCP/IP. Set the observing location and time source in Ekos and verify the resulting mount UTC and native standard-time offset. Refer to the Control Center manual's integration notes and the official INDI driver documentation.

Other controllers

Compatibility depends on the controller software, selected profile and firmware version. Do not transfer another manufacturer's USB baud, brake behavior, Home procedure or protocol settings to Tyr. Consult the current Tyr compatibility instructions before using an appliance profile such as a generic OnStep-compatible selection.

10 Shutdown care and transport

A repeatable session checklist

Before each session, inspect support fixings, saddle engagement, weights and cable routes. Confirm supply capacity and dry connectors. Check the intended observing site and UTC, recover a trustworthy Home reference and polar align again after moving a portable setup. Test pointing and tracking before automation.

After a session, stop acquisition and guiding, Park and wait for completion. Turn tracking off, disconnect the clients and power down. A saved Park position is meaningful only when the reference and actual equipment position remain trustworthy.

Routine care

Wipe exterior surfaces with a soft, dry cloth. Remove dirt gently; do not allow grit to enter connectors or joints. Keep plugs and sockets clean and dry. Avoid strong solvents, abrasive cleaners, pressure washing and spraying lubricant into the mount.

Inspect external fasteners, dovetail contact and connector condition regularly. Check cables for damaged insulation, loose plugs and repeated bending. Replace unsuitable external leads with correctly rated parts. Internal adjustment and servicing are support-directed tasks.

Condensation and storage

Allow damp equipment to dry in a ventilated environment before sealing it in a case. Avoid powering wet connectors. When bringing cold equipment into warm humid air, protect it from rapid condensation and let it acclimatize before use or packing.

Store the mount in a dry, protected place away from chemicals, vibration and extreme environmental exposure. Support it in its case so the load is carried by the protective packing, not by an adjustment knob, USB socket or drive axis.

Transport and return shipping

Remove the telescope and counterweights, disconnect cables, and secure loose external parts. Use the original shaped packing or an equivalent protective arrangement. Do not ship a loaded mount or allow an unsupported bar to act as a lever. Retain the serial number and photograph the packed arrangement before a service return.

11 Troubleshooting

Stop if the physical state and reported state disagree. Work through the simplest external causes first. Do not compensate for a slipping drive, wrong reference or weak supply by changing axis scale, motor direction or current.

Symptom	Check and next step
No controller response	Check the main supply, polarity, power button and connections. The standby ring is not a simple on/off lamp.
Resets during slews or accessory start-up	Check supply regulation, total demand, cable losses and connector seating. Remove optional loads while diagnosing.
USB port listed but no communication	Confirm the active front/saddle selector, data-capable cable, correct COM port and 9600 baud. Close programs that open the port independently.
Wi-Fi connected but browser does not open	Remain on the mount network, enter http:// plus its actual IP, and verify AP/station addressing. Repair settings over a working USB connection if needed.
First Home does not finish	Stop, inspect clearance and the exact reported state, then contact support if the cause is unclear. Do not redefine the current position as Home to hide the failure.
Manual motion stops after ten seconds	Expected protection. Release/Stop and start a new movement after checking the path.
GoTo or Sync rejected	Check site, UTC, actual field, pier side, reference and configured limits. A requested target may not have been reached.
Telescope is far from the reported position	Stop. Suspect lost reference, slip, wrong geometry or bad Sync. Recover Home and verify independent pointing.
Tracking drift or poor guiding	Check physical polar alignment, guide calibration, rate, compensation, rigidity, wind and payload/cable torque. Use actual guide data.
R1 connected but no movement	Release all controls, confirm Mode B and Controls armed, check the saved device and ensure it is not connected to another host.
Park failed or position is uncertain	Inspect the reported error, restore a trustworthy reference and test a safe stow path. Do not assume the stored Park state proves physical arrival.

After a failed or interrupted move

Clear the path and stop all control sources. Inspect the physical rig, load and supply. If there may have been a stall, unpowered movement or reference loss, recover using the proper Home procedure rather than trusting the old display. Resume only after site, UTC and independent pointing agree.

Getting help

Contact **support@prometheusastro.com** with the serial number, invoice reference, software/firmware versions, connection method, complete rig description and exact visible error. Include the number of short flashes if the status LED repeats an error code. Explain what happened immediately before it. Support may request additional checks and provide specific instructions. Do not open the casing or erase settings while awaiting guidance.

Status LED patterns and error codes

These patterns apply to the status LED on firmware **1.2.20**. On firmware **1.2.11**, the status LED stays on during normal operation and can flash startup codes 1 through 6.

Pattern	Meaning
Steady on	Mount is powered and idle or slewing, with no reported error.
1 second on, 1 second off	Mount is tracking. The pattern also applies while guiding at normal guide rates.
Groups of short flashes	An error takes priority over the normal indication. Count the flashes between long pauses.

Each short flash lasts **200 ms**, with **200 ms off** between flashes. After the last flash, the LED stays dark for **3 seconds** before repeating the code. Three short flashes followed by that long pause indicate code 3.

Flashes per group	Meaning
1	Saved memory could not be initialized or its data structure is invalid.
2	An invalid stored setting was detected during startup.
3	An input/output device failed to initialize.
4	A motor driver failed to initialize.
5	The time or location source failed to initialize.
6	The weather sensor failed to initialize.
7	A motor driver reported a fault during operation.
8	A horizon, overhead, axis, meridian or limit sensor condition is active.
9	Home failed or was interrupted, including when the operator cancelled it.
10	Park failed.

If several conditions are present, the LED shows one code at a time. Code 7 takes priority, followed by codes 1 through 6 in order, then codes 8, 9 and 10. For a limit or a failed move, check the application message and follow the troubleshooting steps on the preceding page.

12 Warranty service and product records

Manufacturer warranty

Prometheus Astro provides a **two-year manufacturer warranty** for defects in materials and workmanship under normal use, subject to the applicable supplied terms. Keep proof of purchase and the serial number. Contact the supplier or Prometheus Astro before returning equipment; obtain the authorized return instructions and use the specified service address.

Any attempt to open the mount casing and interfere with the internals without first obtaining instructions from Prometheus Astro support will void the manufacturer's warranty. Obtain support instructions before removing a cover, changing internal wiring or attempting an internal repair.

The manufacturer warranty does not cover damage caused by misuse, impact, unsuitable mounting or loading, incorrect power or polarity, liquid ingress, unauthorized modifications or other operation outside the supplied instructions. Applicable consumer law may provide separate rights. This manufacturer warranty does not exclude or restrict mandatory statutory consumer rights, including rights against the seller.

Service process

1. Contact support with the product identification, proof of purchase and a description of the fault.
2. Follow the requested external checks and retain the response for reference.
3. Obtain return authorization and the correct delivery address before shipping.
4. Remove personal accessories and pack the mount as instructed. Send only the agreed items and retain shipping records.

Warranty contact: **Prometheus Astro, Nea Makri, Attica, Greece**. Email: **support@prometheusastro.com**. Website: prometheusastro.com. Use the legal and postal details on your invoice and the return authorization for the applicable supplier and service routing.

Identification and end of life

Retain labels and product identification. Consult the supplied product labels and applicable declarations for regulatory information; this manual does not replace the declaration for your delivered unit. Do not place electrical equipment or controller batteries in unsorted household waste where separate collection applies. Use an appropriate local electronics/battery collection route and follow the accessory manufacturer's disposal instructions.

Your equipment record

Record	Your details
Mount serial number	_____
Purchase date and supplier	_____
Firmware and control software	_____
Tripod/pier and adapter	_____
Telescope and complete moving mass	_____
Counterweight arrangement	_____
Supply and accessory power budget	_____
Site, standard offset and network address	_____

13 Quick reference

Term	Meaning
RA / Dec	Right ascension and declination, the two equatorial coordinates/axis functions
Latitude	Your north/south position on Earth; sets the approximate polar-axis altitude
Polar alignment	Physical alignment of the RA axis with Earth's rotation axis
Home	Known mechanical reference, or the operation returning to it
Sync	Sets a sky-coordinate reference at the telescope's current direction
GoTo	A commanded movement to target coordinates
Park / Unpark	Move to and record a stow state / release that parked state for operation
Meridian flip	Change the equatorial telescope arrangement across the pier
Plate solving	Measuring sky coordinates from an astronomical image
Guiding	Small corrective commands from a guide system during tracking
UTC	Coordinated Universal Time; verify both clock and date
RMS	A statistical error measure whose interpretation depends on measurement conditions

Before every automatic sequence

1. Confirm secure mounting, payload and power.
2. Confirm site, UTC, geometry and Home reference.
3. Confirm physical polar alignment and pointing.
4. Confirm the selected tracking rate and guiding behavior.
5. Confirm limits, flip path, camera train and cables on both pier sides.
6. Confirm that Stop and your recovery procedure are understood.

For the detailed application workflow, use the companion **Tyr Control Center User Manual**. For compatible downloads, current support information and additional instructions, visit Prometheus Astro Downloads.